DATA			
FIRMA			
	DIS.	CONTR./C.UFF.	CONTR.NOR.

CONT.NOR.			
CONT./C.UFF.			
Data			
Firma			
Modifiche			
Indice			

CONT.NOR.			
CONT./C.UFF.			
Data			
Firma			
Modifiche			
Indice			

63–71

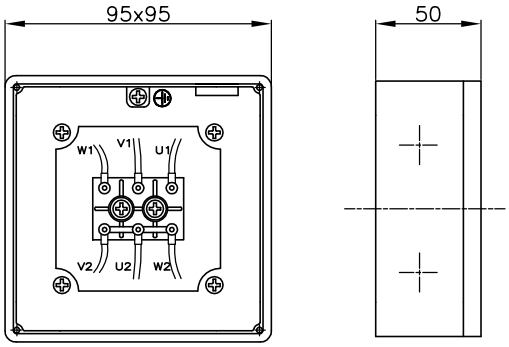

80–100

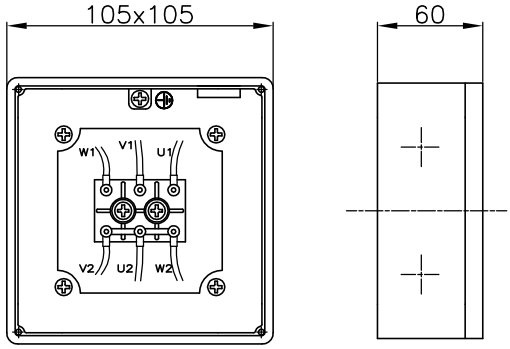

112–132

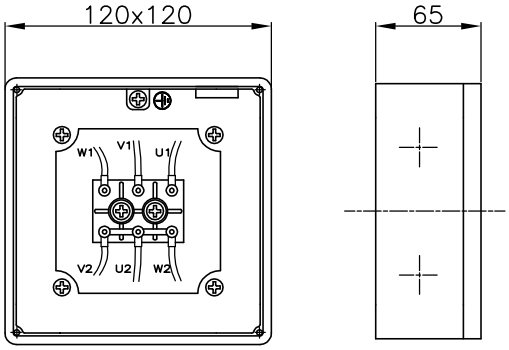

160

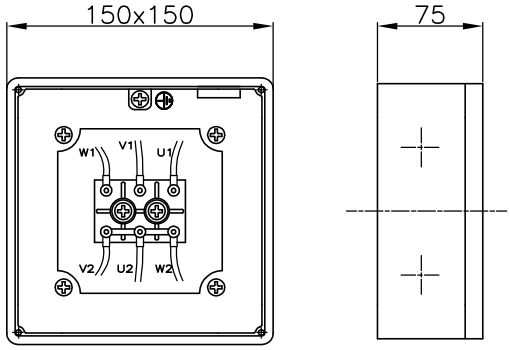

Grandezza Frame size	Tipo morsettiera Type of terminal	Filettatura morsetti Terminal thread	Fori filettati per pressacavi metrici Thread holes for metric cableglands
MAA 63	Threaded terminals	M4	1xM16
MAA 71–90			1xM20
MAA 100		M5	2xM20
MAA 112–132			2xM25
MAA 160		M6	2xM32

DIMENSIONS
DIMENSIONI IN mm

MarelliMotori

SCATOLE MORSETTI/TERMINAL BOXES
MAA 63–160

A00AX708A

Mod. NOR 305–Form.A4

Mod. NOR 305–Form.A4